HVAF SERIES

FLOODLIGHT
HID
HAZARDOUS
CLASS I, DIV. 2
GROUPS A, B, C & D

FEATURES & SPECIFICATIONS:

Construction

- Heavy-duty die cast aluminum housing and door frame
- Hinged door frame allows for easy maintenance
- One-piece silicone gasket forms a water-tight seal between the housing and door frame
- External hardware is corrosion resistant
- Aluminum cable gland at conduit entry
- Available with steel yoke or steel trunnion painted dark bronze
- Standard finish is dark bronze powder coat

Optical System

- Heat and impact resistant tempered glass lens
- Anodized aluminum reflector system with NEMA 7X6 beam pattern

Electrical System

- Quad-tap CWA, Class H ballasts are supplied with all metal halide fixtures and 250W & 400W high pressure sodium fixtures
- High reactance, high power factor quad-tap Class H ballast is supplied with 150W high pressure sodium
- Rated to 40°C in all wattage variations
- Minimum starting temperature -40°C high pressure sodium and -30°C metal halide
- Lamp is included

LISTINGS:

- UL Listed (UL 844) Class I, Div. 2 Groups A, B, C & D
- UL/CUL Listed (UL 1598)
- Suitable for wet locations
- 40°C Ambient temperature

APPLICATIONS:

- Coastal marine areas
- Chemical plants
- Pharmaceutical plants
- Coastal marine facilities
- Mining
- Cold storage facilities
- Hazardous storage areas
- Corrosive environments

OPTIONS:

- Wire guard
- Visor
- Polycarbonate shield
- 4’ Stainless steel safety cable

SHIPPING WEIGHT:

- 20 LBS (Yoke Mount)
- 22 LBS (Trunion Mount)

HVAF SERIES

ORDERING INFORMATION

SERIES	MOUNTING	WATTAGE/SOURCE	VOLTAGE	OPTIONS
HVAF	**YM**	**40P**	**MT**	**-----**

SERIES
HVAF

MOUNTING
TM = TRUNNION MOUNT
YM = YOKE MOUNT

WATTAGE/ SOURCE
PULSE START METAL HALIDE
17P = 175W (ED-28)
25P = 250W (ED-28)
32P = 320W (ED-28)
40P = 400W (ED-37)

HIGH PRESSURE SODIUM
25S = 250W (ED-18)
40S = 400W (ED-18)

OPTIONS (FIELD INSTALLED)
PS = POLYCARBONATE SHIELD
VS = VISOR
WG = WIREGUARD
SC4 = 4' STAINLESS STEEL SAFETY CABLE

VOLTAGE
MT = MULTI-TAP BALLAST (120, 208, 240, 277V)
5T = FIVE-TAP BALLAST (120, 208, 240, 277, 480V)

MOUNTING ACCESSORIES

Mounting hardware is **not included with fixtures and must be ordered separately.

BH2

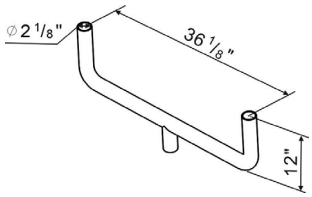

TWO FIXTURE BULLHORN

BH3

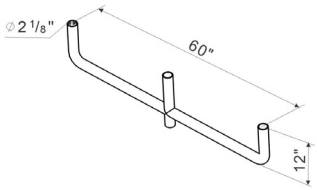

THREE FIXTURE BULLHORN (3@180°)

SFA

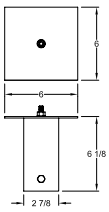

SLIPFITTER ADAPTER

DIMENSIONS

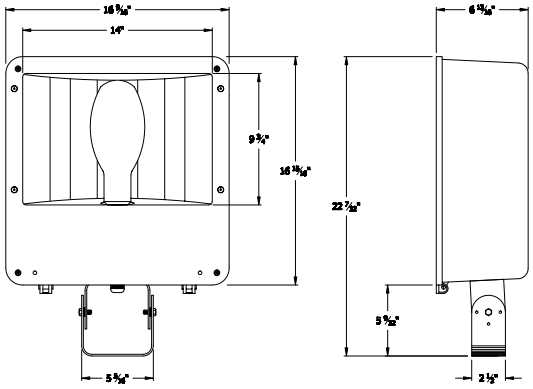

YOKE MOUNT

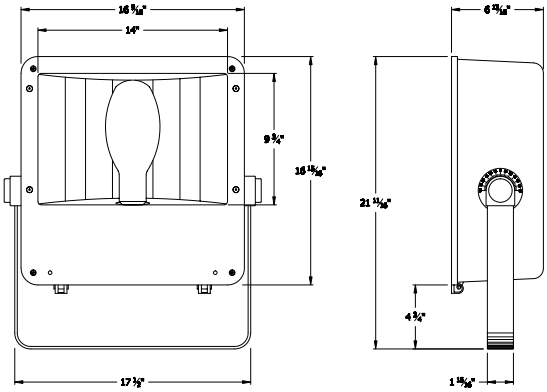

TRUNNION MOUNT

INDATECH LIGHTING

INDATECH LIGHTING
5910 WEST BY NORTHWEST #100
HOUSTON, TX 77040

www.indatechlighting.com

713-937-3600 Phone
866-563-2832 Phone
713-937-3604 Fax