NebuLite

Nebula LED Area Lights

NBAL-50W/80W/100W/150W

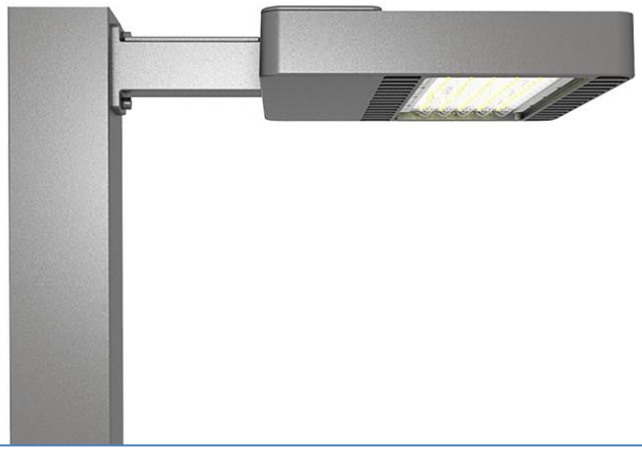

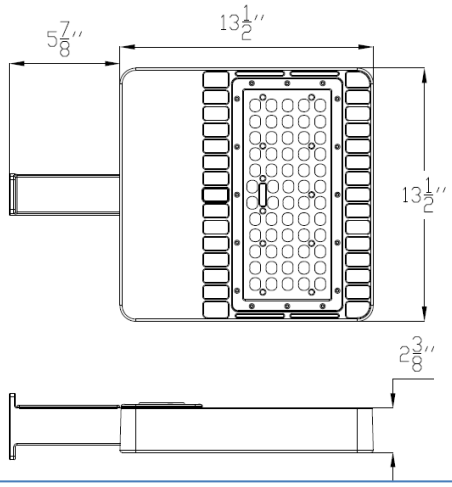

General Description:

The NebuLite Nebula Area Light is a perfect fixture for medium height parking lot poles and also a perfect replacement for all shoebox style flood light that widely used everywhere.

Construction:

-Stylish low profile body that minimizes wind load and retains aesthetic pleasing appearance.
-Corrosion resistant polyester powder coat finish, available in custom colors
-Independent driver compartment separated from light engine that optimizing driver lifespan.
-Cast aluminum structure that resists high shock and vibration

Mounting:

- Multiple mounting options are available providing a solution for most outdoor applications like area, roadway, wall mount, flood, building accent and billboard lighting.

Electrical:

-High Power Factor, low THD UL listed driver with 10KV surge protection.
-Universal line voltage input 120-277V, 347/480V optional
-FCC compliant
-0-10V dimmable

Optical:

-IES Type II, Type III, Type IV and Type V distribution patterns
-Optics are interchangeable and easily replaceable
-Optional house side shield/visor
-Full range CCT from 3000K to 5000K

Controls:

-NEMA twist lock photocontrol and receptacle
-Bi-Level occupancy sensor with wireless App control
-Luminaire wireless interlinking

Warranty:

-5 years warranty for complete fixture

Listings:

ETL
FCC
DLC
RoHs
IP65

Ordering Information:

Family	Wattage	CCT	Optic	Color	Control	Mounting
NBAL	**50W**=50W	**50K**=5000K	(omit)=Type III, Std	(omit)=Bronze, Std	(omit)=none	**ARM1**=Arm mount square pole
= Nebula Area Light	**80W**=80W	**45K**=4500K	**T2**=Type II	**BL**=Black	**OCC**=Occupancy Sensor	**ARM2**=Arm mount round pole
	100W=100W	**40K**=4000K	**T4**=Type IV	**SL**=Silver	**PCN**=NEMA Photocell	**SF**=Slipfitter
	150W=150W	**35K**=3500K	**T5=**Type V	**GR**=Gray		**WM**=Wall Mount
		30K=3000K		**WH**=White		**TB**= Truneon Bracket

NebuLite

Nebula LED Area Lights

NBAL-50W/80W/100W/150W

Specs:

Family Model	Lumens	Wattage	lm/W	CCT	CRI	PF	THD	Size	Weight	L70
NBAL-50W	5,200lm	50W	105lm/W	3000K-5000K	75+	>0.9	<15%	10 7/8"x10 3/4"x2"	10lb	>100,000h
NBAL-80W	8,400lm	80W	105lm/W	3000K-5000K	75+	>0.9	<15%	13 1/2"x13 1/2"x2 3/8"	15lb	>100,000h
NBAL-100W	10,500lm	100W	105lm/W	3000K-5000K	75+	>0.9	<15%	13 1/2"x13 1/2"x2 3/8"	15lb	>100,000h
NBAL-150W	15,700lm	150W	105lm/W	3000K-5000K	75+	>0.9	<15%	13 1/2"x13 1/2"x2 3/8"	15lb	>100,000h

Photometrics:

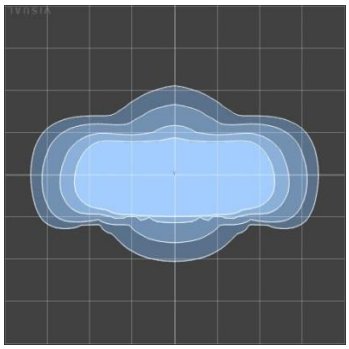

Type II

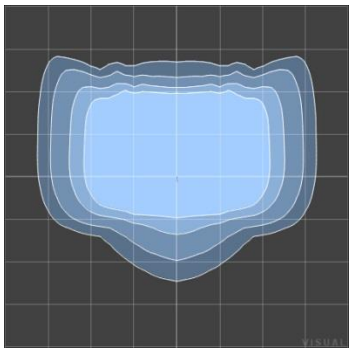

Type III

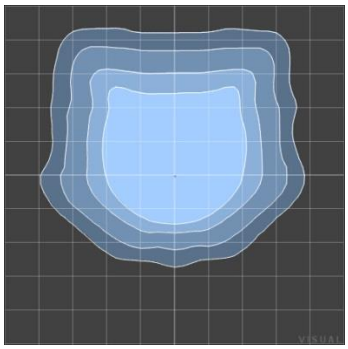

Type IV

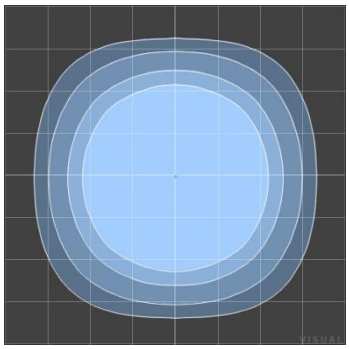

Type V

Mounting Options:

Slipfitter

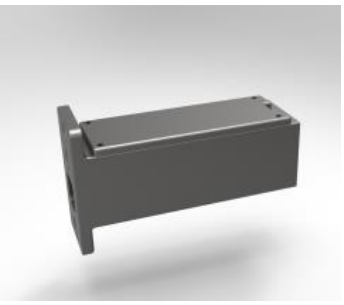

Arm Mount

Wall Mount

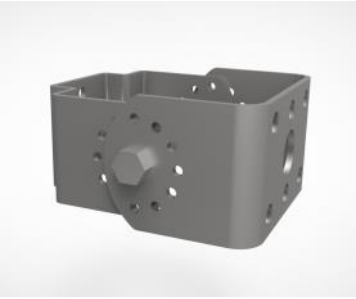

Trunion Bracket

MOUNTING CONFIGURATION

Wall/Trunion

Arm1

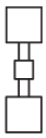

Arm1

Arm1

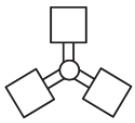

Arm 2

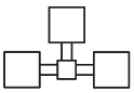

Arm1

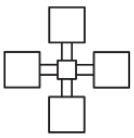

Arm1